UCRL-51892

AD A017789

DETERMINATION OF EQUATION-OF-STATE PARAMETERS FOR FOUR TYPES OF EXPLOSIVE

Lynn Penn
Franklin Helm
Milton Finger
Edward Lee

August 26, 1975

DDC
RECEIVED
NOV 5 1975
B

Prepared for U.S. Energy Research & Development Administration under contract No. W-7405-Eng-48

LAWRENCE LIVERMORE LABORATORY
University of California/Livermore

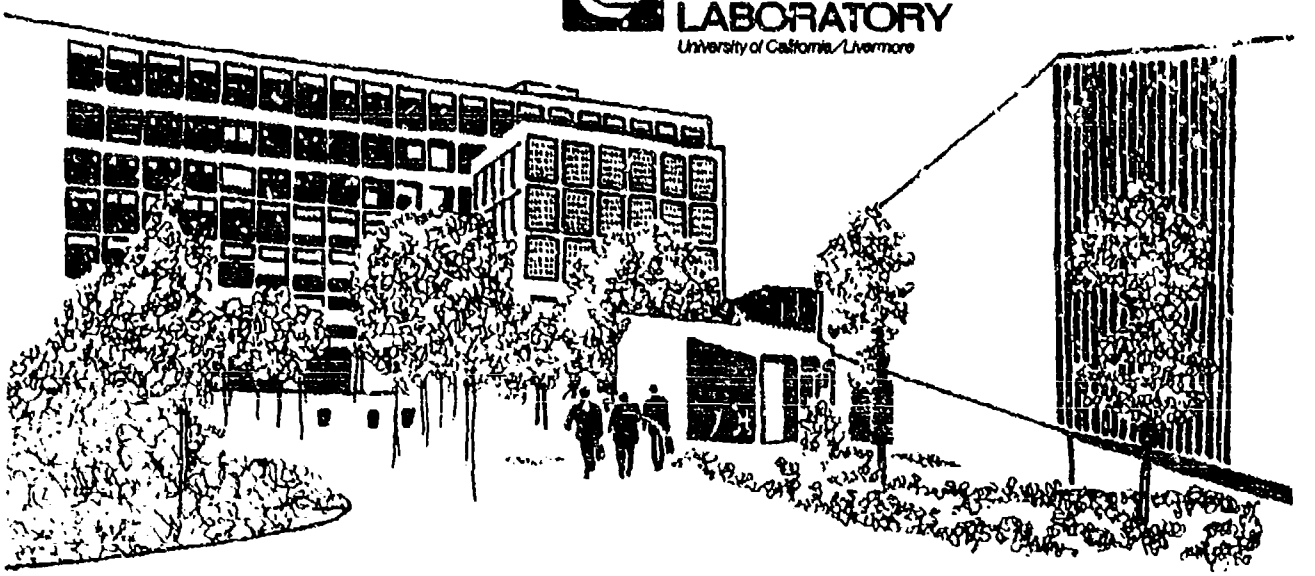

DISTRIBUTION STATEMENT A
Approved for public release;
Distribution Unlimited

1473 in Process
copy
2 Dec 75

USAWES
Vicksburg, Miss.

NOTICE

"This report was prepared as an account of work sponsored by the United States Government. Neither the United States nor the United States Energy Research & Development Administration, nor any of their employees, nor any of their contractors, subcontractors, or their employees, makes any warranty, express or implied, or assumes any legal liability or responsibility for the accuracy, completeness or usefulness of any information, apparatus, product or process disclosed, or represents that its use would not infringe privately-owned rights."

Printed in the United States of America
Available from
National Technical Information Service
U. S. Department of Commerce
5285 Port Royal Road
Springfield, Virginia 22151
Price: Printed Copy $___*; Microfiche $2.25

*Pages	NTIS Selling Price
1-50	$4.00
51-150	$5.45
151-325	$7.60
326-500	$10.60
501-1000	$13.60

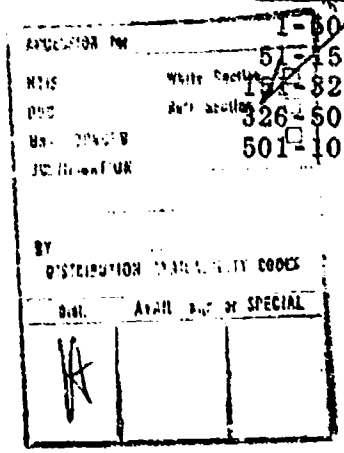

ACCESSION for
NTIS White Section
DDC Buff Section
UNANNOUNCED
JUSTIFICATION
BY
DISTRIBUTION/AVAILABILITY CODES
Dist. AVAIL. and/or SPECIAL
A

Distribution Category
UC-45

LAWRENCE LIVERMORE LABORATORY
University of California/Livermore, California/94550

(14) UCRL-51892

(6) # DETERMINATION OF EQUATION-OF-STATE PARAMETERS FOR FOUR TYPES OF EXPLOSIVE

(10) Lynn/Penn, Franklin/Helm, Milton/Finger Edward/Lee

MS. date: August 26, 1975

(11) 26 Aug 75

(15) W-7405-Eng-48

(12) 33p.

DISTRIBUTION STATEMENT A
Approved for public release;
Distribution Unlimited

390 '11

Contents

Abstract 1
Introduction 1
Available Explosives and Selection Criteria 2
Explosive Selection 3
    ANFO 3
    Dynamite 3
    Nonaluminized Slurry Blasting Agent 4
    Aluminized Slurry Blasting Agent 4
Explosive Performance 4
Equation of State 7
Results 12
Conclusion 14
Acknowledgments 15
References 15
Appendix: Available Commercial Explosives and
    Manufacturers' Data 16

*PRECEDING PAGE BLANK-NOT F

DETERMINATION OF EQUATION-OF-STATE PARAMETERS FOR FOUR TYPES OF EXPLOSIVE*

Abstract

The detonation parameters of a representative of each of four types of commercial explosive (a mixture of ammonium nitrate and fuel oil, commonly called ANFO, a traditional stick dynamite, an aluminized slurry blasting agent, and a nonaluminized slurry blasting agent) were determined experimentally by instrumented cylinder and hemisphere tests. The equation-of-state parameters for each of the materials were then calculated by using the J-W-L equation of state.

Introduction

The research described in this report is part of a program developed by the Army Corps of Engineers and funded by the National Science Foundation. The full program is directed toward the development of blasting technology in general. It includes hydrodynamic calculations of explosion effects, followed by testing at experimental and full-scale levels. The goal is to produce guidelines for blast-hole burden and spacing, detonation timing, lift height, and stemming specifications.

The part of the program reported here was done by the Organic Materials Division (OMD) of Lawrence Livermore Laboratory. The Corps of Engineers requested that OMD apply a suitable equation of state to samples from four categories of commercial explosives and blasting agents: 1) a mixture of ammonium nitrate and fuel oil (ANFO), 2) a stick-type dynamite, 3) a nonaluminized, water-resistant blasting agent, and 4) an aluminized water-resistant blasting agent.

A survey of the current explosives market was made, and the commercial products that appeared most promising for our purposes were selected. We performed experiments which consisted of making measurements on a detonating explosive charge of the sample material confined by a mass of metal. The data from these experiments were used in computer calculations to determine the values of the parameters in a suitable equation of state describing the gaseous detonation products of each of the four composite explosives. The equation-of-state results were then used as input for hydrodynamic calculations simulating blasting in rock environments.

*Prepared for the U.S. Army Corps of Engineers, with the support of the National Science Foundation.

Available Explosives and Selection Criteria

The Army Corps of Engineers required tests on samples from four categories of explosive or blasting agent. They provided two simple guidelines for choosing explosives within the four categories: 1) a detonation pressure of 50 kbars or more and 2) continuing availability of the material. We were given the responsibility for evaluating the candidates and making the final choices.

In the survey of the market of commercial blasting agents and explosives, it was found that there is an abundance of products: dry blasting agents, slurry blasting agents, slurry explosives, and dynamites, packaged in every conceivable way, from sausage casing to pump truck. The traditional nitroglycerin dynamite is being phased out of production by most companies because of its expense and hazardousness.

Commercial blasting agents and explosives are formulated and packaged to do specialized jobs. Besides the well-known mining "permissibles," with their cooler flames and less noxious gases, there are seismological blasting agents, some for use under dry conditions and others for wet conditions; there are small-diameter cylinders for presplitting (for either wet or dry situations); there are formulations that resist deactivation due to high borehole pressure; there are formulations that are specifically for use in small-diameter holes; there are formulations with long shelf-lives.

Many of these formulations evolved through trial and error in the field; very few have been performance-tested extensively or precisely in the laboratory. Often there is minimal quality control of the ingredients, so that purity and particle size vary from lot to lot. The carbonaceous ingredients often vary in type, depending upon availability and price. A company's offerings may substantially change from year to year; in the recent past, more products have been withdrawn from the market than have been added. Often a product will keep the same brand name but will vary in composition from time to time.

Commercial establishments have universally designated their explosive formulations as proprietary and are reluctant to give out such information. Since this information was essential to our study, some products had to be eliminated as candidates because formulation information was not forthcoming. A list of all currently available commercial explosives is given in the Appendix. Most companies list some basic data other than ingredients about their products: density, unconfined detonation velocity at one diameter, bubble energy or total energy, etc. This is included in the Appendix.

The products used in this study were chosen for conformity to the Corps of Engineers' requirements and for experimental feasibility, which entailed shot-test reliability and reproducibility, homogeneous loading, and closeness to "ideal" detonation behavior.

The criterion of ideal behavior deserves elaboration. Commercial blasting agents are composite explosives, not homogeneous explosives. Upon detonation, only a fraction of the material in the

reaction zone is converted to reacted products (mostly gaseous) in thermodynamic equilibrium. The remainder of the material reacts over an extended time, resulting in a lower but more sustained pressure. This is in contrast to a homogeneous explosive such as nitromethane, in which all the unreacted material in the reaction zone is converted to products within a very short time as the shock wave traverses the material. It is almost certainly a fact of nature that no explosive is truly ideal in its detonation behavior; however, explosives such as nitromethane can exhibit behavior which is ideal to within experimental error. A great many complications can be avoided by applying an equation of state to a material which behaves nearly ideally. Particle size and charge diameter influence the degree to which a particular formulation approaches ideal detonation behavior. Thus we restricted our choice of explosive or blasting agent to those for which the manufacturer's literature indicated maximum ideality. (Ideality is discussed in greater detail in the section on equation of state.)

Explosive Selection

ANFO

As the ammonium-nitrate-and-fuel-oil (ANFO) blasting agent, we chose a prilled ANFO from Gulf,* NCN-100 blasting agent, which consisted of N-IV-grade prilled ammonium nitrate (AN) and No. 6 diesel fuel oil (FO). Recent work using this material indicated it to be a reasonable candidate.[1,2] Most ammonium nitrate prills on the market are similar, although some contain an adduct† to prevent the solid-solid phase change which occurs at 33°C. All prills are coated with an anticaking agent and can be crushed to the degree necessary to attain the desired bulk density.

The prills are mixed with No. 6 diesel fuel so that the resultant ANFO is 94% ammonium nitrate and 6% fuel oil by weight. The Gulf N-IV prills had a density of 0.88 g/cm^3, were coated with 0.43-0.88% Kaolin to prevent caking, and had a mixture of particle sizes.

DYNAMITE

There were several good candidates for the stick dynamite sample: Du Pont Red Cross 50% Extra, Atlas 60% Extra Dynamite, Trojan-U.S. Powder 60% nitroglycerin-sensitized ammonia dynamite, and Hercules Unigel. We chose Unigel because it had more of the smaller ammonium nitrate particles than the other candidates, had a low sodium nitrate content (sodium nitrate reduces detonation temperature, and therefore reduces pressure), was a water-resistant gel, and, as far as could be determined, would continue to be produced in the future.

*Reference to a company or product name does not imply approval or recommendation of the product by the University of California or the U.S. Energy Research & Development Administration to the exclusion of others that may be suitable.

†Diammonium phosphate, boric acid, and ammonium sulfate.

NONALUMINIZED SLURRY BLASTING AGENT

For the nonaluminized slurry explosive or blasting agent, we chose Du Pont Pourvex Extra. We were interested in developing equation-of-state parameters for this relatively new product, which Du Pont offered as a replacement for dynamite. It contained a monomethylamine nitrate (MMAN) sensitizer, a substance not before widely used in this capacity. Originally we had wanted to try Tovex 550, but this is a stiff, almost solid gel; in order to easily load our cylinders, we switched to Pourvex Extra, which is the pourable equivalent of Tovex 550. Because this product was a relatively new development, obtaining the necessary proprietary compositional data was a long, effortful process.

ALUMINIZED SLURRY BLASTING AGENT

We selected Atlas Aquanal for the aluminized slurry blasting agent. The usual slurry blasting agent or slurry explosives were thickened by a gum gelling system and by a high concentration of undissolved solids. The Aquanal slurry was an emulsion, where microscopic cells of water and dissolved oxidizer salts were suspended in a continuous medium of waxy oil containing dispersed air bubbles and aluminum.[3] Particle size was meaningless in this system. Unconfined, in 38.1-mm diameter, this emulsion was reported to detonate reliably, with very high velocities. The performance was reported to be much closer to ideal than that of the usual aluminized slurry. However, after receiving this material we were informed that the preferred wax used in the emulsion was in short supply and that a nonpreferred wax had therefore been substituted.[4] This substantially changed the performance of the blasting agent, as we describe in subsequent sections.

Explosive Performance

Performance parameters were obtained from events recorded during detonation of an explosive charge confined by metal. Detonation velocity and metal-wall motion were measured in scaled metal-acceleration experiments in which explosive composition and density were accurately known. Scaling of the experiments was made possible by changing charge diameter while maintaining a constant ratio of metal mass to explosive mass. An ideal explosive will exhibit a constant rate of energy release over a wide range of diameters. The decrease in rate of energy release at smaller diameters is a measure of the nonideality of the explosive.

Aluminum spheres and copper cylinders were used as test hardware. The explosive-to-metal mass ratio in the sphere test is 16.2 times that in the cylinder test. The direction of propagation of the explosive shock wave is normal to the wall of the sphere and parallel to the cylinder wall. For these reasons, plus the greater divergence in spherical geometry, the sphere test reflects the pressure history primarily in the early expansion of the high-explosive product gases. The cylinder test, on the

other hand, provides a slowly expanding system which is more sensitive to later behavior. Table 1 summarizes the dimensions of the precision metal containers.

Table 1. Test hardware dimensions.

Type	Inside diameter (mm)	Wall thickness (mm)	Length (mm)
Cylinder	50.8	5.197	304.8
Cylinder	101.6	10.399	1016.0
Sphere	203.2	4.233	–
Sphere	406.4	8.467	–

The sphere-test container, shown in Fig. 1, consists of a hemispherical bottom with a cylindrical top section. The length of the top section is somewhat greater than the radius of the hemisphere. The precision cover permits accurate positioning of the booster cavity in the center of the hemisphere. The void remaining in the booster cavity after the booster has been installed is filled with flake TNT to provide an approximate density match with the explosive being tested. Because detonation velocity was not measured precisely in the sphere test, an estimate was made from streaking-camera records.

Both detonation velocity and metal-wall motion were measured precisely in the cylinder test. The cylinder-test configuration is shown in Fig. 2. Detonation velocity was measured by obtaining times between measured sets of shorting pins. Two pin rings containing six pins each were located 215 mm apart on the 50.8-mm (2-in.) cylinder and 457 mm apart on the 101.6-mm (4-in.) cylinder.

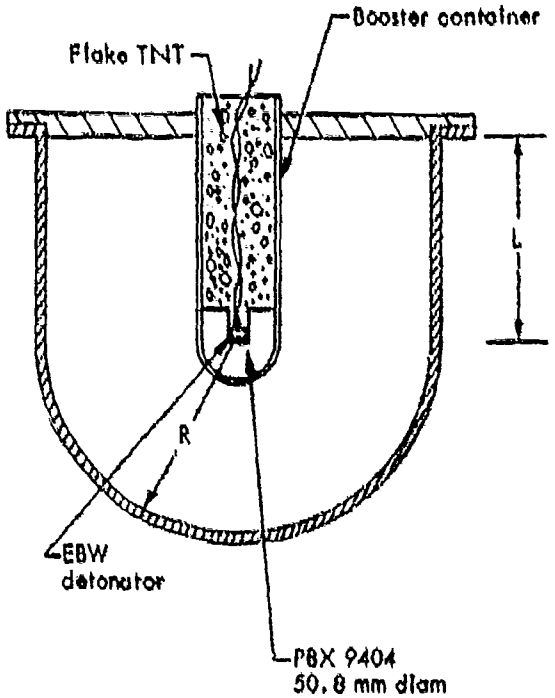

Hemispherical shell: aluminum, ASTM-6061-T6, density = 2.70 g/cm^3 L > R
Initiator radius of PBX 9404 = 2.54 cm

Fig. 1. Sphere-test hardware.

Data on detonation velocity and density are presented in Table 2.

To obtain metal-wall velocity, each test was viewed by two streaking cameras and one framing camera. The diagnostic arrangement is shown in Fig. 3. When both streaking-camera records were of acceptable quality, they were averaged together.

Table 3 presents the radius - wall-velocity histories of all shots fired in the series. Table 4 represents the radius - time histories. All shots have been scaled to a 25.4-mm cylinder diameter or a 203.2-mm sphere diameter by simple division.

The larger sphere and cylinder tests reported here are among the first performed at LLL. Because metal motion in these

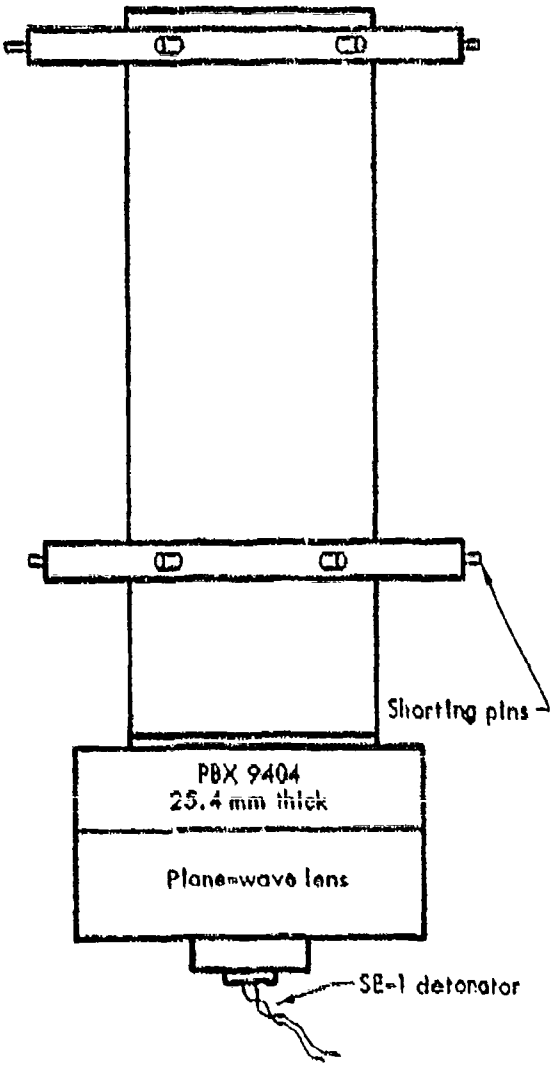

Cylinder: OFHC copper, ASTM-B-187, density = 8.93 g/cm^3

Fig. 2. Cylinder-test hardware.

large shots takes place over a relatively long period of time, one of the more important new requirements for these shots was a light source of longer duration than could be obtained from an argon candle. A special flash tube, with a light pulse several milliseconds in duration, was chosen. This change required a series of dry-run photographs to determine lens-stop and filter limitations. The light intensity from the flash tube was much lower than from an argon candle. For this reason, film emulsions of lower density were tolerated in order to maximize the sharpness of the image.

Table 2. Detonation velocity and density of explosives as tested in cylinder and sphere experiments.

Material	Test	Detonation velocity (mm/μs)	Density (g/cm^3)
ANFO	101.6-mm cylinder	3.890	0.782
	203.2-mm sphere	4.7[a]	0.783
	406.4-mm sphere	5.3[a]	0.782
Unigel dynamite	50.8-mm cylinder	5.477	1.294
	101.6-mm cylinder	5.761	1.262
Aquanal	50.8-mm cylinder	--	1.43
	101.6-mm cylinder	3.731	1.43
Pourvex	50.8-mm cylinder	--	1.364
	101.6-mm cylinder	6.328	1.364

[a]Estimates obtained from streaking-camera records.

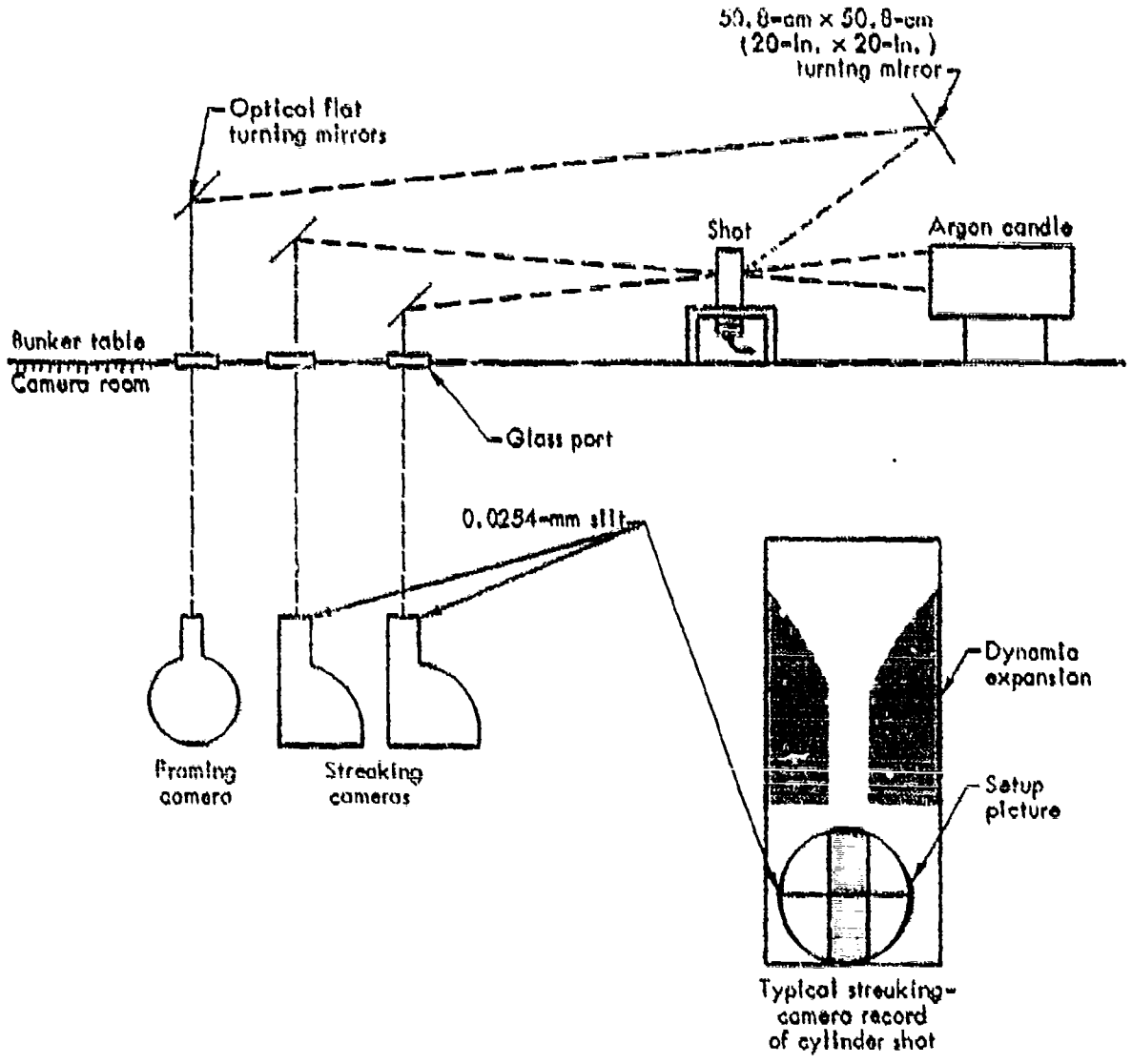

Fig. 3. Typical test configuration.

Equation of State

To make predictive calculations regarding the performance of an explosive, it is necessary to have a suitable equation of state for the gaseous products of detonation. When the equation of state of the detonation-product gases is known, the energy of these gases may be expressed as a function of their pressure and volume. The experimental and calculational methods used to develop an equation of state for a high explosive are throughly described in Ref. 5.

Table 3. Radius - wall-velocity histories of cylinder and sphere tests.[6]

	Wall velocity, V_w (cm/μs)								
	ANFO			Unigel dynamite		Aquanal		Pourvex	
$R-R_0$ (mm)	101.6-mm cylinder	203.2-mm sphere	406.4-mm sphere	50.8-mm cylinder	101.6-mm cylinder	50.8-mm cylinder[b]	101.6-mm cylinder	50.8-mm cylinder	101.6-mm cylinder
6	0.704	1.221	1.222	0.957	1.013		0.745	0.996	0.983
7	0.725	1.262	1.269	0.982	1.038		0.771	1.014	1.000
8	0.745	1.302	1.301	1.000	1.058		0.795	1.028	1.015
9	0.764	1.341	1.341	1.016	1.076		0.817	1.041	1.028
10	0.780	1.377	1.368	1.030	1.092		0.837	1.054	1.042
11	0.796	1.409	1.392	1.044	1.106		0.855	1.065	1.056
12	0.810	1.436	1.414	1.057	1.119		0.869	1.076	1.069
13	0.822	1.453	1.434	1.070	1.129		0.881	1.085	1.080
14	0.831	1.466	1.453	1.080	1.138		0.890	1.093	1.089
15	0.839	1.477	1.472	1.090	1.142		0.897	1.099	1.095
16	0.845	1.486	1.491	1.099	1.153		0.904	1.104	1.099
17	0.852	1.498	1.509	1.108	1.159		0.912	1.108	1.102
18	0.860	1.512	1.527	1.117	1.164		0.920	1.111	1.104
19	0.866	1.529	1.545	1.123	1.171		0.929	1.113	1.106
20	0.871	1.543	1.562	1.124	1.176		0.938	1.116	1.083
22		1.587	1.598	1.124	1.187		0.954	1.123	1.115
24		1.613	1.623		1.196		0.962	1.132	1.124
26		1.634	1.648		1.203		0.967	1.142	1.133
28			1.671		1.209			1.148	1.138
30			1.692		1.221			1.150	1.144
32			1.719		1.230			1.151	
34			1.732						
36			1.753						

[6] 50.8-mm and 101.6-mm cylinder tests have been scaled to 23.4-mm cylinder tests; 406.4-mm sphere tests have been scaled to 203.2-mm sphere tests.

[b] A low level of reaction was observed in this test. Wall motion was very slow.

It must be noted that most equations of state apply to ideal detonations. As mentioned before, a composite nonideal explosive detonates in such a way as to convert only a fraction of the reactants in the reaction zone to products in a small time scale. The remaining material reacts more slowly (over many microseconds), with reaction pathways complicated by kinetics, transport phenomena, confinement, and geometry. The detonation is not truly steady. Different detonation velocities may be detected at various points along the detonation pathway. The nonideal detonation of composite explosives still qualifies as a detonation because it is shock-initiated and the explosive reaction propagates the shock.

A model which more correctly describes the detonation performance of a composite explosive is a time-dependent one combining the fast initial reaction and the slow nonideal reaction.[6] This may be stated as

$$p = [1 - F(t)] \cdot f_1(V,E) + F(t)\, f_2(V,E) ,$$

where p = pressure,

V = volume of products/volume of undetonated explosive,

F = energy contained in composition at hand,

f_1 = equation of state for fast initial reaction,

Table 4. Radius - time histories of cylinder and sphere tests.[a]

	Time (μs)								
	ANFO			Unigel dynamite		Aquanal		Pourvex	
$R-R_0$ (mm)	101.6-mm cylinder	203.2-mm sphere	406.4-mm sphere	50.8-mm cylinder	101.6-mm cylinder	50.8-mm cylinder[b]	101.6-mm cylinder	50.8-mm cylinder	101.6-mm cylinder
6	11.180	6.136	6.129	8.127	7.633		11.292	7.364	7.584
7	12.580	6.942	6.931	9.158	8.608		12.611	8.358	8.592
8	13.940	7.722	7.707	10.166	9.561		13.889	9.338	9.585
9	15.265	8.479	8.462	11.158	10.498		15.129	10.304	10.564
10	16.560	9.214	9.200	12.136	11.421		16.338	11.258	11.530
11	17.829	9.932	9.924	13.100	12.331		17.520	12.202	12.483
12	19.075	10.635	10.637	14.052	13.230		18.679	13.156	13.424
13	20.301	11.327	11.339	14.992	14.119		19.822	14.061	14.355
14	21.510	12.012	12.032	15.922	15.001		20.951	14.979	15.277
15	22.708	12.692	12.715	16.844	15.440		22.070	15.891	16.193
16	23.895	13.367	13.390	17.758	16.747		23.181	16.798	17.105
17	25.074	14.037	14.057	18.664	17.612		24.282	17.702	18.013
18	26.242	14.702	14.716	19.563	18.473		25.374	18.604	18.919
19	27.400	15.360	15.367	20.456	19.330		26.455	19.503	19.824
20	28.552	16.010	16.010	21.345	20.182		27.526	20.401	20.726
22		17.285	17.435	23.127	21.875		29.639	22.187	22.527
24		18.534	18.521		23.553		31.726	23.961	24.313
26		19.769	19.744		25.220		33.800	25.722	26.086
28			20.949		26.879			27.467	27.848
30			22.139		28.525			29.206	29.601
32			23.314		30.156			30.945	
34			24.475						
36			25.623						

[a]50.8-mm and 101.6-mm cylinder tests have been scaled to 25.4-mm cylinder tests; 406.4-mm sphere tests have been scaled to 203.2-mm sphere tests.

[b]A low level of reaction was observed in this test. Wall motion was very slow.

f_2 = equation of state for completely reacted explosive,

$F(t)$ = a time-dependent function expressing the fraction of completion of the slow reaction.

We refer to this as a two-component, time-dependent model for composite high explosives.

If composite explosives are carefully chosen so that their behavior closely approximates "ideal" detonation, then the performance of such explosives may be described by an equation of state like those in Ref. 5 developed for "ideal" materials (i.e., a one-component model), and use of the two-part equation may be avoided.

In the past, a number of equations of state were proposed to describe ideal high-explosive behavior,[7-8] but attempts to use them to calculate precise hydrodynamic experiments proved unsatisfactory.[10,11] This led to the development of the empirical equation referred to as the J-W-L equation of state.[10] It describes the pressure-volume-energy relationships of the products of detonation. The form of the equation is

$$p = A\left(1 - \frac{\omega}{R_1 V}\right)e^{-R_1 V} + B\left(1 - \frac{\omega}{R_2 V}\right)e^{-R_2 V} + \frac{\omega E}{V}, \qquad (1)$$

where A, B, R_1, R_2, and ω are constants, and V is the relative volume v/v_0, the ratio of the volume of gaseous detonation products to the volume of unreacted explosive. As can be seen by inspection, at large V (such as 10) and low p, the first two terms diminish in importance and the last term dominates. At high p, near the Chapman-Jouguet (C-J) pressure for the explosive, the first term dominates, and at intermediate values of p and V the middle term dominates because of the relative values of R_1 and R_2 (4:1).

The equation for an adiabat (isentrope) is given by

$$p_S = Ae^{-R_1V} + Be^{-R_2V} + \frac{C}{V^{\omega+1}} , \qquad (2)$$

where C is a constant.

It is assumed that a strong shock wave passes through the material, heating and compressing it, causing complete reaction in the region directly behind the shock wave. The Hugoniot equation

$$(E - E_0) - 1/2\ (p + p_0)\ (v_0 - v) = 0 \qquad (3)$$

(the subscript zero refers to the undetonated explosive) defines the Hugoniot locus and defines the thermodynamic state of the detonation products. The C-J condition defines the detonation (i.e., a point on the Hugoniot):

$$\left(\frac{\partial p}{\partial v}\right)_S = \frac{-(p - p_0)}{v_0 - v} . \qquad (4)$$

This is usually assumed to be evaluated at equilibrium composition of the product gases.

From the C-J condition, the slope of the line tangent to the C-J adiabat at the C-J point is $\rho_0 D^2$. This is the same as saying that the derivative (slope) of the adiabat is $\rho_0 D^2$.

$$\frac{\partial p}{\partial v} = \rho_0 D^2\ (-V^2) \qquad (5)$$

$$= \left[-AR_1e^{-R_1V} - BR_2e^{-R_2V} - \frac{C(\omega + 1)}{V^{\omega+2}}\right](-V^2).$$

Equations (1), (3), and (5) allow us to determine the coefficients A, B, and C for a given choice of R_1, R_2, and ω using experimental data D, E, V.

All of these necessary experimental data are not always available. For example, accurate calorimetric data are often difficult to obtain because the calorimetry must be done on a small scale and may not reflect the true reactions and energy output of a larger sample of explosive. Thus the energy is calculated by using the heats of formation of the components.

Another type of experimental data often unavailable is the C-J pressure. The C-J pressure must therefore be estimated. This is done by using the equation

$$p_{cj} = \frac{\rho_0 D^2}{\Gamma + 1} , \qquad (6)$$

where the density (ρ_0) of the undetonated explosive is measured, the detonation velocity D is measured, and Γ at the C-J point is assumed to fall in the range 2.7 to 2.9. This approximation is found to hold true for most CHNO-type explosives.

A few comments on the value of Γ may be helpful. In an adiabatic expansion of gases, $\Gamma = -[(\partial \ln p)/(\partial \ln V)]_S$, and this value of Γ is by no means constant throughout the expansion of the gaseous products of detonation. Initially the value is

large: i.e., there is a large increase in pressure for a slight increase in volume. When the gases are at high pressure, as in the initial stages of expansion, the repulsive forces between molecules $[(1/r^{12}) - (1/r^{6})$, according to Lennard-Jones] are especially important. These forces diminish rapidly and the intermolecular potential changes curvature with increase in volume. The value of Γ shows a net decrease between the initial volume and some later large volume.

However, for an adiabatic expansion which has been matched to experiment, the plot of Γ versus V has two maxima.[10] The first maximum seems to occur at a volume corresponding to that of the high-density product gases if they were an actual solid crystal lattice. The second maximum has not yet been satisfactorily explained.

Since at large expansions the gases behave more nearly ideally, the quantity $-[(\partial \ln p)/(\partial \ln V)]_S$ would approach a limiting value C_p/C_v.

In the J-W-L equation of state, at large volumes and consequently low pressures, the first term, $\omega E/V$, dominates the behavior and thus functions as a polytropic gas equation of state. The polytropic gas equation of state is given by

$$p = (\Gamma - 1)\frac{E}{V} , \qquad (7)$$

where again E is energy per unit volume and V is relative volume (v/v_0). The polytropic gas equation applies in the case of an ideal gas (or a real gas at low pressures). This means that

$$p = (\Gamma - 1)\frac{E}{V} = \frac{\omega E}{V} . \qquad (8)$$

Thus $\Gamma - 1 = \omega$. Now $\Gamma = -[(\partial \ln p)/(\partial \ln V)]_S$, and this value approaches C_p/C_v as the behavior of the gas approaches ideal gas behavior (say at $V > 10$).*

To use the J-W-L equation, an initial guess is made for the nonlinear coefficients R_1, R_2, and ω. Experience has shown that for explosives containing elements C, H, N, and O, $R_1 \approx 4$ and $R_2 \approx 1$ and ω has a value between 0.2 and 0.4. For the explosives described here, p_{CJ} was calculated from Eq. (6). The streaking-camera records enabled the determination of relative energy delivered to a metal cylinder or hemisphere wall by the expanding products of detonation. This energy was proportional, at each given volume expansion of gaseous products, to $E_0 - E$, where E_0 was the

*For a monatomic gas with only translational degrees of freedom, $C_V = (3/2)R$. If C_V exceeds this value, then the gas contains some form of energy in addition to translational. The equation for C_V in terms of R is

$$C_v = (3N/2)R ,$$

where 3N = number of degrees of freedom possible in the gaseous species, and N = number of atoms in the molecular species. Using the equation

$$\frac{C_p}{C_v} = \frac{(3N/2)R + R}{(3N/2)R} ,$$

one can see that, the more atoms per molecule, the closer C_p/C_v approaches 1.0 (the monatomic value is 1.60). Thus in a mixture of gaseous products of detonation where the gases are triatomic and diatomic at least, a Γ value at large expansions of 1.2 to 1.4 is reasonable. Since Γ becomes $\omega + 1$ at large expansion, the value of ω is necessarily from 0.2 to 0.4.

total available energy of the undetonated explosive. $E_0 - E$ was evaluated from

$$E - E_0 = \frac{Ae^{-R_1V}}{R_1} + \frac{Be^{-R_2V}}{R_2} + \frac{C}{\omega V^{\omega}} - E_0 \quad .* \qquad (9)$$

Hydrodynamic calculations of the metal-wall kinetic energy were made at each of many V and $E_0 - E$ pairs. The coefficients R_1, R_2, and ω were systematically adjusted until the metal-wall velocity at each V and $E_0 - E$ was in agreement with experiment. Typically this was done with one or two iterations.

Results

J-W-L equation of state coefficients are listed in Table 5. C-J pressures were estimated, and the energy (E_0) values were calculated by using the composition as given by the manufacturers, assuming equilibrium among the detonation products. The detonation velocities were measured as described.

Figure 4 shows the energies of the expanding gases relative to the energy of nitromethane. This relative energy is obtained by comparing the squares of the metal-wall velocities at given expansions.

The performance of Aquanal did not conform to the manufacturer's claims of high detonation velocity and stable detonation propagating down to 38.1-mm diameter unconfined.[3] In fact, the Aquanal tested did not sustain detonation at all in a 50.8-mm (2-in.) copper cylinder. For this reason, the cylinder data on Aquanal are from the 101.6-mm (4-in.) cylinder only. Its nonstandard performance in these tests is attributed to the fact that the preferred waxes essential to the emulsified nature of the material were no longer available and more ordinary waxes had been used in manufacture.[4]

On the other hand, Pourvex Extra behaved as a homogeneous HE in our experiments. The 50.8-mm and 101.6-mm cylinder-test results were, when scaled, within experimental error of each other. In this case, the use of the one-part (ideal) equation of state was clearly justified.

The scaled cylinder-test results for Unigel dynamite did show the effect of charge diameter on detonation velocity and on energy delivered to accelerate the metal wall. The 101.6-mm cylinder had a slightly higher detonation velocity and higher energy, even though the loading densities were identical.

The ANFO, as expected, was much lower in energy and detonation velocity than the other explosives. Its behavior was much less than ideal, and, as can be seen from the scaled sphere-test results, the detonation velocity was greater in the larger charge diameter.

*The equation for E is simply the integral of the equation for p_s:

$$E = \int pdV = \int \left[Ae^{-R_1V} + Be^{-R_2V} + \frac{C}{V^{\omega+1}} \right] dV$$

$$= \frac{Ae^{-R_1V}}{R_1} + \frac{Be^{-R_2V}}{R_2} + \frac{C}{\omega V^{\omega}} \quad .$$

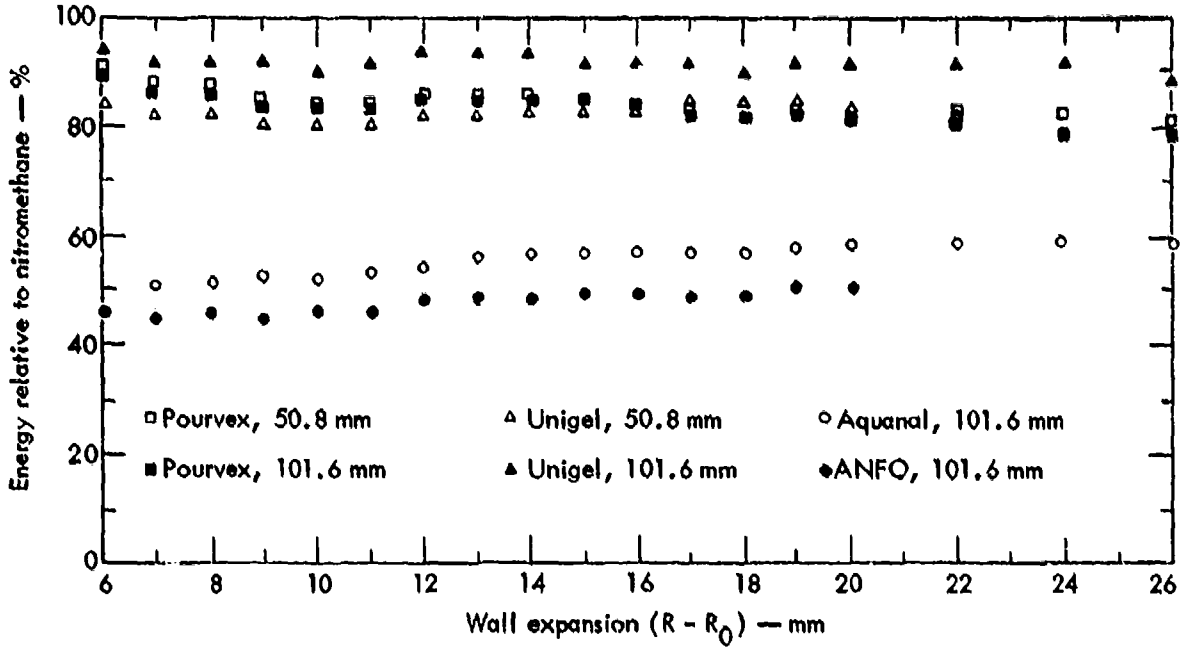

Fig. 4. Cylinder-test energy results relative to nitromethane, scaled to 25.4 mm (1 in.).

Both the Unigel dynamite and the ANFO, therefore, displayed the nonideal behavior of a composite explosive. Comparison of the scaled data shows that the error introduced by using only a one-part (ideal) equation of state is small in the case of Unigel. In fact, the error in delivered energy for Unigel, comparing the scaled experiments, is less than 5%.

In the case of ANFO, comparison of the scaled spheres showed a difference in delivered energy of only 1.5%. This was later shown to be misleading, but it was on this basis that a preliminary estimate of the equation of state was made. Two-dimensional hydrodynamic calculations (HEMP code) for the 101.6-mm cylinder have now confirmed our earlier suspicions that, in fact, the heavily confined 101.6-mm copper-cylinder test produces significantly more (35%) delivered energy than the rather lightly confined sphere.

Since the sphere tests were not large enough to measure the ultimate performance, and since only one cylinder size was tested, it would be premature to estimate a two-phase equation of state for ANFO. We are conducting a series of large-scale measurements on ANFO from which we hope to obtain the necessary data for a precise two-phase equation of state.

For estimates of ANFO performance in heavy confinement, as in the 101.6-mm copper cylinder or in a blasting hole, we have provided here a one-part equation of state which yields the measured energy delivery.

Table 5. C-J parameters and J-W-L coefficients.

	Aquanal	Pourvex Extra	Unigel	ANFO
ρ_0 (g/cm^3)	1.43	1.36	1.262	0.782
p (Mb)	0.055	0.130	0.120	0.055
D (mm/μs)	3.7	6.1	5.76	5.0
E_0 (Mb.m^3/m^3)	0.055	0.045	0.051	0.029[a]
Γ	2.559	2.893	2.49	2.554
A	0.9123	3.2207	1.907	0.7519
B	0.00407	0.07769	0.0758	-0.008175
R_1	4.4	4.7	4.4	4.1
R_2	1.0	1.4	1.4	1.25
ω	0.16	0.16	0.23	0.44
C	0.007456	0.003241	0.00627	0.0117

[a]Based on energies of formation of the calculated (TIGER) C-J detonation products. Since the products are principally H_2O, CO_2, and N_2, the value for E_0 is a reliable estimate of the total available energy.

Conclusion

Detonation tests were made on four types of composite explosives or blasting agents: Gulf NCN-100 (ANFO), Hercules Unigel (dynamite), Atlas Aquanal (aluminized slurry blasting agent), and DuPont Pourvex Extra (nonaluminized slurry blasting agent). Detonation velocities and cylinder or hemisphere metal-wall expansion rates were measured, detonation pressures were estimated (on the basis of cylinder-test data), and energies were calculated from the compositions published by the manufacturers.

These C-J detonation parameters were used to determine the adjustable coefficients in the J-W-L equation of state. The form of the J-W-L equation of state used here was a one-part, time-independent one. In all cases, except for ANFO, the use of such a one-part equation, which neglected the slower reaction of a fraction of the reactants in the explosive, was justified on the basis that the error introduced was not sufficient to warrant the difficulties encountered in using the complete equation. The behavior of ANFO, however, was sufficiently nonideal to warrant development of a two-part equation of state in the future. A one-part equation, sufficient to describe ANFO behavior under heavy confinement, was provided for use in the remainder of the Army Corps of Engineers' program.

Acknowledgments

The assistance of John Walton and Henry Cheung in calculational procedures is gratefully acknowledged.

References

1. M. W. McKay, S. L. Haucock, and D. Randall, Development of a Low-Density Ammonium Nitrate/Fuel Oil Explosive and Modeling of Its Detonation Properties, Physics International Co., DNA 3351 F (October 1974).

2. L. D. Sadwin and J. F. Dittman, Airblast Characteristics of AN/FO Phase I, U.S. Naval Ordnance Laboratory, NOLTR 69-82 (1969).

3. H. G. Bluhm and N. M. Junk, in Proc. Symposium on Military Applications of Commercial Explosives, 98 (1972).

4. N. Junk, ICI America Inc., private communication.

5. M. A. Cook, The Science of High Explosives (Reinhold Publishing Co., New York, 1968), p. 61.

6. M. Finger, E. Lee, F. Helm, H. Cheung, and D. Miller, Participation of LLL in JSEXP; Performance of Non-Ideal HE, Lawrence Livermore Laboratory, Rept. UCID-16439 (December 1973).

7. H. Jones and A. R. Miller, Proc. Roy. Soc. (London) A-194, 480 (1948).

8. J. A. Beattie and W. Stockmayer, "The Thermodynamics and Statistical Mechanics of Real Gases," in A Treatise on Physical Chemistry, H. S. Taylor and S. Glasstone, Eds. (D. Van Nostrand Co., Inc., New York, 1951), p. 187.

9. R. D. Cowan and W. D. Fickett, J. Chem. Phys. 24, 932 (1956).

10. E. L. Lee, H. C. Hornig, and J. W. Kury, Adiabatic Expansion of High Explosive Detonation Products, Lawrence Livermore Laboratory, Rept. UCRL-50422 (1968).

11. J. W. Kury, H. C. Hornig, E. L. Lee, J. L. McDonnell, D. L. Ornellas, M. Finger, F. M. Strange, and M. C. Wilkins, Metal Acceleration by Chemical Explosives, Lawrence Livermore Laboratory, Rept. UCRL-12425 (1965).

Appendix: Available Commercial Explosives and Manufacturers' Data

Table A1. Dynamites 17
Table A2. ANFO 22
Table A3. Metallized ANFO 24
Table A4. Slurry blasting agents and slurry explosives 25
Table A5. Dry blasting agents 28

Table A1. Dynamites.

Product name and contents	Weight strength (%)	Bulk strength (%)	Density (g/cm³)	1-1/4-in. diam unconfined detonation velocity (m/s)	E_{tot} (cal/g)	Detonation pressure (kb)	Bubble energy (cal/g)	Friction impact	Water Resistance[a]	Fume Class of fumes[a]
Du Pont										
Straight NG[b]	30	30	1.38	3480		42[c]			Poor	Poor
"	40-50	40-50	1.38-1.36	4140-4830		57-77[c]			Good	VP
"	60	60	1.33	5460		99[c]			Excellent	VP
Red Cross Extra: NG, AN	30-35	16-29	1.29	2400-2850		18-26[c]			VG	VG
"	40	36	1.29	3100	721	61			VG	VG
"	50	45	1.29	3400	724	76.4			VG	VG
"	60	58	1.29	3600	702	83.2			VG	VG
Red Cross	25-30	14-16	1.15-1.10	1140-1200		3.7-3.9[c]			VP	VP
Free-running dynamite: NG, AN	40-65	21-33	1.05-1.00	1320-1330		4.3-5.7[c]			VP	VP
Stripkolax: NG, AN			1.08	2030		11[c]			Good	
100% gelatin: nitrocotton + NG	100								Great	Poor
Gelatin: NG, NC	30-60	32-66	1.66-1.48	3150-5910		41-127[c]			Excellent	VG
"	75-90	70-79	1.40-1.32	6180-6690		133-146[c]			Excellent	VP
Hi-Velocity gelatin[d]: NG, NC	40-60	38-47	1.50-1.32	5010-5910	1026(?)	93-118[c]			Excellent	VG
"	70-90	53-71	1.25-1.17	6090-6600		114-126[c]			Excellent	VP
Special gelatin: NC, NG, AN	25-60	35-75	1.60-1.32	3930-5130	782	63-85[c]			Excellent[f]	VG
Toval: NG, NC		39	1.60	4000	766	73			Excellent	VG
Red Arrow: NG, AN gel	70		1.28	3960		50[c]			Good	1
Trenchrite				4620					Good	1
Gelox: NG, NC, AN										
1	62	60	1.28	3930		49[c]			VG (=special gelatin)	
2	62	45	1.16	3780	782	41[c]			VG "	VG
5	62	30	0.94	3390	794	27[c]			Good	VG
Hi-Drive: NG, NC, AN			1.31	5200	1021	87.6[c]			G	
Seismogel A: NG, NC			1.57	5100	1097	101[c]			Good	
60% Seismographic Hi-Velocity gelatin[d]: NG, NC			1.50	6000	1204	133[c]			Excellent	
Seismex: NG, NC, AN, gel			1.41	4100	948	58.5[c]			Fair	
Hi-Cap[e]: NG, AN										
1			1.16	2720	707	21.3[c]				
2			1.05	2600	682	17.5[c]				
3			0.95	2450	672	14[c]				
Sausage Powder[g]: NC, NG, AN										
A			0.96	1700		6.8[c]				
B			0.96	2070		10[c]				
C			0.96	2700		17[c]				
Trimtex[h]: NG, AN			0.94	3450		28[c]				
Trimtex 2[h]: NG, AN			0.92	2750		17[c]				
Trimtex WR[h,k]: NG, AN			1.08	3700		36[c]				

Table A1 (continued)

Product name and contents	Weight strength (%)	Bulk strength (%)	Density (g/cm³)	1-1/4-in. diam unconfined detonation velocity (m/s)	E_{tot} (cal/g)	Detonation pressure (kb)	Bubble energy (cal/g)	Friction impact	Water Resistance[a]	Fume class of fumes[a]
Du Pont (continued)										
Duobel[i]: NG, AN										
A			1.05	2760	339	20[e]			G	A
B			0.94	2700	630	17[e]			G	A
C			0.85	2550		14[e]			G	A
D			0.75	2400		11[e]			Fair	A
Nubobel[i]: NG, AN										
AA			1.18	2700	674	31[e]			G, VG	A
A			1.05	2220		13[e]			VP	A
B			0.94	2100		10[e]			VP	A
C			0.85	1965		8.4[e]			VP	A
D			0.75	1860		6.4[e]			VP	B
E			0.65	1815		5.3[e]			VP	B
Lump Coal C[i]: AN, NG			0.85	1740		6.3[e]			VP	A
Lump Coal CC[i]: AN, NG			0.85	1710	708	6.1[e]			VP	A
Celobel AA[i]: gel NG, NC, AN			1.34	4950	783	81[e]			Excellent	A
Celobel C[i]: semigel NG, NC			1.18	3630		38			Good	A
Hercules										
Herculite UN[h,k]: NG, AN	65	25	0.94	3150	714	25	343	Data	Good	1
Red H[i]: NG, AN										
A			1.20	3500	614	17	329	Data	Fair	
B			1.03	3175	700	25	350	Data	Fair	
C			1.03	1650	671	8	357	Data	Poor	
D			0.91	1750	671	7	350	Data	Fair	
F			0.81	1930	679	7	357	Data	Poor	
L			0.77	1900	693	6	364	Data	Poor	
Collier-C[i]: NG, AN			0.90	3025	664	21	350	Data	Fair	
Hercogel A[i]: NG, AN			1.44	5150	679	80	321	Data	Good	
Herconite 3, 3X[j]: NG, AN	65	45	1.11	3300	643	29		Data		1
Hercol 2, 2X[j]: NG, AN	65	50	1.20	3200	643	28	321	Data		1
Hercol 4, 4X[j]: NG, AN	68	35	1.03	2900	629	25	314	Data		1
Hercol Regs NG, AN	66	35	1.00	1600	607	7	300	Data		Poor
Hercon 2, 2X[j]: NG, AN	65	50	1.20	3500	729	34	364	Data		1
Hercon 3, 3X[j]: NG, AN	65	45	1.11	3300	714	29	364	Data		1
Gelamite gelatin dynamite: NG, AN										
D	70	75	1.40	5400	714	47	357	Data	Good	1
1, 1X[j]	67	57	1.30	3450	642	38			Good	1
2, 2X[j]	65	46	1.18	3500	657	32	329	Data	Good	1
3, 3X[j]	65		0.94	3000	714	21	343	Data	Poor	1
NG dynamite: 50% NG	50	52	1.30	5300	879	80	443	Data		3
Extra dynamite										
20% NG, AN			1.30	2500	343	16	271	Data		
40% NG, AN	40	36	1.30	3000	657	27	336	Data		1
50% NG, AN	50	46	1.30	3300	679	32	336	Data		1
60% NG, AN	60	53	1.25	3800	714	40	343	Data		1

Table A1 (continued)

Product name and contents	Weight strength (%)	Bulk strength (%)	Density (g/cm³)	1-1/4-in. diam unconfined detonation velocity (m/s)	E_{tot} (cal/g)	Detonation pressure (kb)	Bubble energy (cal/g)	Friction impact	Water resistance[a]	Fume class or fumes[b]
Hercules (continued)										
Medium-velocity dynamite: 73% RDX, 13% TNT	60		1.1	6000		39				
Vibrocol 1 seismographic: AN, NG	65	30	1.03	1620	642	8.4			Depends on casing	
Vibrocol 3 gelatin dynamite, prospecting: NG			1.3	5910	785	139			Excellent	
Unigel gelatin dynamite: NG, AN	67	58	1.26	4110	678	49.4				
40% Gelatin: NG	40	44	1.5	5400	642	108[c]			Excellent	Excellent
60% High-Pressure Gelatin: NG	60	52	1.4	5910	750	121[c]			Excellent	Poor
Gelatin Extra 40: NG, AN	40	43	1.5	5400	642	108[c]			Good	1
Gelatin Extra 60: NG, AN	60	54	1.4	6390	642	143[c]			Good	1
Gelatin Extra 75: NG, AN	75	65	1.4	6900	642	165[c]			Good	1
Atlas										
Extra dynamite: NG, AN, NaN										
60% NG	60	53.2	1.29	3010	851	50	412	Det	Fair	Good
50% NG	50	46.3	1.29	3700	840	45		Det	Fair	Good
40% NG	40	36.3	1.35	2580	784	40	410	Det	Fair	Good
30% NG	30	26.5	1.35	2270	863	28		Det	Fair	Good
20% NG	20	16.0	1.35	2120	850	20		Det	Fair	Good
Farmax Ditching, straight dynamite: NG, NaN			1.34	4570	1224	35		Det		
Giant Gelatin: NG, NC, AN, NaN										
90% NG	80	90	1.36	6360	1046	139		Det		
75% NG	63	75	1.42	5300	1050	133		Det		
60% NG	51	60	1.46	4870	1021	120	43[d]	Det		
50% NG	40	50	1.58	4250	1045	93		Det		
40% NG	33	40	1.58	3940	965	75	476	Det		
30% NG	25	30	1.70	3120	949	30		Det		
KleenKut[h]										
A: NG, NC, AN, NaN gel		40	1.16	3640		35		Dets		
B: NG, NC, AN, NaN, semigel		52	0.81	3010		55		Dets		
C: NG, NC, AN, NaN semigel		52	0.64	3010		55		Dets		
D: NG, AN, NaN		26	0.43	3090		34		Dets		
E: NG, AN, NaN		26	0.35	3090		34		Dets		
F: NG, AN, NaN		13	0.27	2130		16		Dets		

Table A1 (continued)

Product name and contents	Weight strength (%)	Bulk strength (%)	Density (g/cm³)	1-1/4-in. diam unconfined detonation velocity (m/s)	E_{tot} (cal/g)	Detonation pressure (kb)	Bubble energy (cal/g)	Friction impact	Water Resistance[a]	Fume class or fumes[b]
Atlas (continued)										
Conite[i]										
SR: NG, AN, NaCl			0.70	1980	856	13		Data	Poor	A
SW			0.76	1620		6			VP	A
SY: NG, AN, NaCl			0.83	1990	958	9		Data	VP	A
SP: NG, AN, NaCl			0.88	2130	757	17		Data	Poor	A
SH: NG, AN, NaCl			0.98	2210	661	15		Data	Poor	A
SU: NG, AN, NaCl			1.08	2630	778	30		Data	Good	
SS: NG, AN, NaCl			1.20	2390	667	34		Data	Good	A
SSR			0.79	2100		18			Poor	A
SHR			1.00	2850		23			Poor	A
SLR			1.09	2610		29			Poor	A
BP: NG, AN, NaCl			0.76	1860	694			Data		
Gelcoalite E: NG, NaN, AN, NH_4Cl, gel			1.41	5600	938	98		Data	Excellent	A
Peerless 2E[i]			1.07	2040		21		Data	Fair	A
Annodyte: NG, AN, NaN										
1	64.3	47	1.20	3540	926	46	394	Data		
2	64.3	34.5	1.04	2500	696	42		Data		
3	64.3	31	0.96	2360	909	38		Data		
4			0.88	2280	970	34		Data		
Gelodyne: semigel NG, NC, AN, NaN										
2	64.6	53	1.29	3010	943	55	414	Data		
3	66.8	46.8	1.22	3640	953	65		Data		
Power Primer: gel, booster, NG, NC, AN, $NaNO_3$			1.36	5800	1081	133	486	Data		
Trojan - U.S. Powder										
Ditching Dynamite: NG	50	48	~1.4	5100						
Special Dynamite: NG, AN	30	17	~1.3	2400					Good	Good
"	30	26	~1.3	2760					Good	Good
"	40	35	~1.3	3210					Good	Good
"	50	45		3600					Fair	Good
"	60	52		3900					Fair	Good
Super Dynamite: NG, AN	65	45	~1.2	3850					Fair	Good
"	65	40	~1.1	2700					Fair	Good
"	65	35	~1.0	2550					Fair	Good
"	65	30	~0.93	2400					Fair	Good
"	65	25	~0.90	2250					Fair	Good
"	65	20	~0.82	2100					Fair	Good
Super Permissibles: NG, AN	37	20		2250						
"	61	25		2250						
"	60	30		2730						
"	61	43		2850						
"	58	15		2040						
"	59	10		2080						

Table A1 (continued)

Product name and contents	Weight strength (%)	Bulk strength (%)	Density (g/cm³)	1-1/4-in. diam unconfined detonation velocity (m/s)	E_{tot} (cal/g)	Detonation pressure (kb)	Bubble energy (cal/g)	Friction impact	Water resistance[a]	Fume class or fumes[a]
Trojan - U.S. Powder (continued)										
Gelatin Permissibles: NG, AN	61	61	~1.4	4300						
"	63	45		3300						
Special Gelatin: NG, AN	35	40		4740					Excellent	Excellent
"	55	60	~1.4	5100					Excellent	Excellent
Mine Gel: semigelatin NG										
1	65	60		3700					Good	Good
2	65	45		3600					Good	Good
3	65	40		3450					Good	Good
4	65	35		3700					Good	Good
5	65	30		3000					Good	Good
Pitatinny										
Low-velocity dynamite: 17.5% RDX, 48% TMT, 8.6% TPET			0.90	4400		43				

[a]Abbreviations for fumes are VP = very poor, VG = very good. Explosives with a very poor rating are not recommended for underground use. Permissibles are given fume classes A, B, etc., according to Bureau of Mines data. Number ratings for fumes are I.M.E. fume classes, digit 1 representing the best fume characteristics, and digit 4 representing the worst fume characteristics.

[b]No longer offered for sale but listed here for comparison.

[c]Detonation pressure calculated from company data using $p = 0.00987\ \rho D^2/4$, where D = detonation velocity in m/s and ρ = original density of the explosive. M. A. Cook, The Science of High Explosives (Reinhold Publishing Co., New York, 1958), p. 35.

[d]Hi-Veloc. Gelatin's special feature is resistance to desensitization due to pressure and aging.

[e]The Hi-Caps feature economy.

[f]Water resistance of special gelatins is less than that of plain gelatins.

[g]Sausage powder is for seismic use; sequential shooting and matched velocity of earth.

[h]For controlled blasting, pre-splitting.

[i]Permissibles are for use in dusty, gaseous coal mines. They have short, cooler, smaller flames.

[j]Letter suffix X means 1/2 the volume of fumes as non X.

[k]WR means water resistant.

Table A2. ANFO.

Product name	Poured density (g/cm³)	Pneumatically loaded density (g/cm³)	Particle density (g/cm³)	Particle size	Fuel oil	Large diam (3-6 in.) detonation velocity (m/s)	Detonation pressure (kb)	P_{tot} (cal/g)	Bubble energy (cal/g)	Surface coating	Prop of AN	Weight strength (%)	Bulb strength (%)
Du Pont													
SP-2 AN Prills[a]	0.83		1.39-1.47	6-20 mesh	Diesel #2	4500					Prills	60	
ANFO-P	0.80	0.98		6-20 mesh	Diesel #2	4700	482				Prills		
ANFO-MD (high density)	0.85	1.03			Diesel #2	4500	50	890					
Militia 303	0.90			6-20 mesh	Nonvol. oil	4733	48.2	883			Prills		
Tovite	1.12				Diesel #2	4500							
Hercules													
Herco Prills	0.80	0.95		6-20 mesh	Diesel #2	3240					Prills	65	
Dynatex 2	1.07				Diesel #2	3750	40	378			Grains	65	40
Herco Blasting Agent #1[b]	0.95					3960	37	785				65	
Herconia 1	0.80	0.94		6-20 mesh	Diesel # 2	3840	30	771			Prills	65	
Herconia 2	0.80	0.94		6-20 mesh	Odor-less H.C. Oil	3840	30	771			Prills	65	
Atlas													
Prills	0.78-0.83			6-20 mesh	Diesel # 2	3750	16	944	425		Prills	65	23
Prillite ANFO 94/6	0.81			6-20 mesh	Diesel # 2	3750	16	944	425		Prills	65	33
Prillite A ANFO 94/6[c]	0.81			6-20 mesh	Special oil	2733	16	944	425		Prills	65	33
Prillite CR ANFO 94/6	0.98	Variable crushed whole prills			Diesel #2	3000	37	944	453		Crushed prills	65	30
Prillite MD ANFO 94/6	1.10	"			"	3120	14	944	419		Crushed prills	65	40
Prillite LD ANFO + bulking agent	0.35	"		"	"	2640	12	773			Crushed prills	49	9
Trojan-U.S. Powder													
TL-100[d]	0.67				"	3350	24				Sawdust grains, some prills	65	29
TL-101[d]	1.15				"	4140	49				"	65	41
TL-103[d] 15-20% bulking agent	0.40				"	2650	4				"	40	15
TL-101	0.77				"	3150	19				Prills	65	24
TL-201 CVO[e]	0.74				Special non-volate	3000	18				Prills	65	24
Gulf													
N-IV Prills	0.80									0.43-0.60% Zeolin			
HCH-100	0.93					3660	31	700	448		Prills		
HCH-200[f]	0.93				Special oil	3660	31	700	448		Prills		

Table A2 (continued)

Product name	Poured density (g/cm^3)	Pneumatically loaded density (g/cm^3)	Particle density (g/cm^3)	Particle size	Fuel oil	Large diam (5-6 in.) detonation velocity (m/s)	Detonation pressure (kb)	E_{tot} (cal/g)	Bubble energy (cal/g)	Surface coating	Form of AN	Weight strength (%)	Bulk strength (%)
Gulf (continued)													
NCN-500	0.95 (0.80)					3930	36(30)	668	425				
NCN-501	1.07					3900	40						
NCN-505	1.07					3760	38						
NCN-509	1.07					3720	38						
NCN-510	1.15					3570	36	859	648				
NCN-515	1.15					3500	35	872	656				
Tue Pack	1.15					3450	33						
NCN 51D + bulking agent	0.75 (0.50)					4000	28(20)	650	400				
Monsanto													
MX-30 Prills[g]	0.77			6-20 mesh						1.6% Kaolin	Prills		
E-2 Prills[h]	0.96		1.50	6-20 mesh						None	Prills		
M*Pel ANFO	0.80				Diesel #2	3300	21	400			MX-30 prills		
M*Pow. 100	0.90				Diesel #2	3900	34				E-2 (crushed) prill 10040		
M-Pak 100	0.90				Diesel #2	3900					E-2 prills		
M-Pak 500	1.00				Diesel #2	3600					E-2 prills		
M-Pak 600	1.00				Diesel #2	4250					E-2 prills		
Terra Chem.													
Prills				6-16 mesh						1% clay	Prills		

[a]Prills made by Phillips, data given for prills with 6 fuel oil added.

[b]Not for underground or pneumatic loading.

[c]For underground use.

[d]Not popular in Western U.S. Available in cartridge pack for use in wet environments.

[e]Designation CVO means special nonvolatile oil.

[f]Good for underground use.

[g]Will cyclize at approximately 32°C, not phase stabilized.

[h]Will not absorb fuel oil without crushing; is phase stabilized.

Table A3. Metallized ANFO.

Product name	Poured density (g/cm^3)	Pneumatically packed density (g/cm^3)	Particle size	Metal Content (%)	Metal Type	Fuel oil	Large diam (5-6 in.) detonation velocity (m/s)	Detonation pressure (kb)	E_{tot} (cal/g)	Bubble energy (cal/g)	Surface coating	Form of AN	Weight strength (%)	Bulk strength (%)
Atlas														
Pellite CRAL: 90% AN, 4% FO +	0.92			6	Al	Diesel	3000	27	1176	506		Crushed		
Pellite RDAL: 6% Al, 90% AN 4% FO, 6% Al	1.10			6	Al	Diesel	3320	34	1176	521				
Trojan-U.S. Powder														
Alumitol 80	1.20				Al		4500						70	65
Alumitol 50	1.15				Al		4200						65	65
Alumitol 30	1.15				Al		3900						60	50
Dow														
Temprel 3	0.95			5	Al alloy									
Temprel 6	0.95			10	"									
Temprel 9	0.95			15	"									
Temprel 12	0.95			20	"									
Temprel 15	0.95			25	"									
Monsanto														
M-Pour 400 (Al)	0.90				Al	Diesel #2	4200	39				E-2 prills, 100% crushed		
M-Pour 500 (Fe, PO_4)	1.00				Fe, PO_4	Diesel #2	3600	32				E-2 prills 100% crushed		
M-Pour 600 (Al + Fe + PO_4)	1.00				Al Fe, PO_4	Diesel #2	4150	42				E-2 prills, 100% crushed		
Hercules														
HP 221A	0.8					Diesel #2	3900					Crushed prills		
HP 202A	0.8					Diesel #2	3750					Crushed prills		
HP 216A	0.9					Diesel #2	4050					Crushed prills		
HP 170A	0.9					Diesel #2	3600					Crushed prills		

Table A4. Slurry blasting agents and slurry explosives.

Product name and contents	Density (g/cm³)	5 in. diam unconfined detonation velocity (m/s)	Detonation pressure (kb)	E_{tot} (cal/g)	Bubble energy (cal/g)	Metal	Water Resistance	Friction Impact 30-cal bullet	Friction Pendulum Test	Shipping class	Weight strength (%)	Cartridge strength (%)
Ireco												
Iregel												
SHS 326[a]	1.20	3810[b]					Excellent					
SHS 346	1.22	3900[b]					Excellent					
SHS 376	1.25	3990[b]					Excellent					
SHS 406	1.27	4095[b]					Excellent					
SHS 446	1.29	4230[b]				Al	Excellent					
SHS 476	1.32	4320[b]				Al(17%)	Excellent					
SHS 616: AN, FO, Al												
SHS 646												
SHS 676												
335: AN, H_2O, carbonaceous ful fuels, guar	1.20	3870				Al	Excellent					
355: "	1.23	3930[b]				Al	Excellent					
375: "	1.25	3990[b]				Al	Excellent					
405: "	1.28	4095[b]				Al	Excellent					
455: "	1.33	4260[b]				Al(16%)	Excellent					
724-P: perchlorate-sensitized		5400[c]	102				Excellent	Fail				
Iremite 40	1.10	3300[d]				Al	Excellent			A		40
Iremite 60	1.12	3450[d]				Al	Excellent			A		60
Iremite 80	1.14	3600[d]				Al	Excellent			A		80
Iremex-F smokeless powder	1.52	5850					Excellent					
Iretol DBA-22[e]												
Gulf												
Slurran: Al, AN, NCN												
-600	1.15	4220		535	359	Al				Oxid.		
-605	1.15	4130		572	373	Al				Oxid.		
-609	1.15	3940		812	560	Al				Oxid.		
-610	1.30	4100		535	350	Al				Oxid.		
-615	1.30	4000		600	383	Al				Oxid.		
Slurran: HE-sensitized NCN												
-900	1.15	4100		514	338					HE		
-905	1.15	4040		638	420					HE		
-909	1.15	3850		838	552					HE		
-910	1.30	4360		470	313					HE		
-915	1.30	4300		612	398					HE		
ToePack-6: Al, AN, ACN	1.30	3710		812	559	Al				Oxid.		
Atlas												
Aquaram: NCN, AN	1.2	5450	90(95)	639	359			Fail	Fail	Oxid.		
Aquanal: NCN,AN,Al	1.2	5450	90(95)	866	388	Al		Fail	Fail	Oxid.		
Aquaflo: NCN, AN	1.35	5750	120	649	346			Fail	Fail	Oxid.	45	50
Du Pont												
Tovex												
100: HMX-sensitized, small diam	1.10	4500[c]	95	800				Fail		A		

Table A4 (continued)

Product name and contents	Density (g/cm^3)	5 in. diam unconfined detonation velocity (m/s)	Detonation pressure (kb)	E_{tot} (cal/g)	Bubble energy (cal/g)	Metal	Water Resistance	Friction impact 30-cal bullet	Friction Pendulum Test	Shipping class	Weight strength (%)	Cartridge strength (%)
Du Pont (continued)												
Tovex (continued)												
200: MMAN-sensitized, small diam	1.10	4800[c]	108	900				Fail		A		
500: MMAN-sensitized				900								
550: MMAN-sensitized				1018								
600: MMAN-sensitized				1136								
Tovex Extra, pump/pkg water gel	1.37	6100	105.6	672				Fail		B		
Tovex Extra A-1, pump/pkg water gel	1.37	6065	105.5	849				Fail		B		
Pourvex Extra, pourable gel	1.33	6004	97	678				Fail		B		
Nitrovan												
100, NCN pump water gel	1.05	4613	50.7	609								
200, NCN pump water gel: Al	1.07	4722	54.9	696		Al						
300 NCN pump water gel: Al	1.11	4921	62.0	847		Al						
Tovan, pump/pkg water gel	1.15	5324	71.7	693				Fail		B		
Tovan Extra, pump/pkg water gel												
A-1	1.15	5348	74.8	874		Al		Fail		B		
A-2	1.15	5317	77.0	1056		Al		Fail		B		
A-3	1.15	5240	75.8	1279		Al		Fail		B		
EL-799, small-diam gel	1.10	4100[f]		749				Fail		A		
EL-799A, small-diam gel	1.10	4400[f]		906		Al		Fail		A		
EL-805, intermed.-diam water gel	1.20	4500[g]		781				Fail		A		
EL-805A, intermed.-diam, Al, water gel	1.25	4800[g]		961		Al		Fail		A		
EL-805B, intermed.-diam, Al, water gel	1.27	4800[g]		1171		Al		Fail		A		
EL-805C, intermed.-diam water gel	1.30	5500[g]		811				Fail		A		
EL-805D, intermed.-diam, Al, water gel	1.35	4800[g]		1482		Al		Fail		A		
EL-755J, small-diam pump water gel	1.25	5250[d]		692				Fail		A		
EL-816 permissibles, 1-in. diam												
Trojan-U.S. Powder												
Trojel												
WS-7: NCN	1.45	6000									50	56
WS-7 LV: NCN, low viscosity	1.45	6000									50	58
WS-10: NCN	1.40	6000									50	58
WS-11: Al, NCN	1.50	6000	125								65	75

Table A4 (continued)

Product name and contents	Density (g/cm^3)	5 in. diam unconfined detonation velocity (m/s)	Detonation pressure (kb)	E_{tot} (cal/g)	Bubble energy (cal/g)	Metal	Water Resistance	Friction impact 30-cal bullet	Friction pendulum test	Shipping class	Weight strength (%)	Cartridge strength (%)
Hercules												
HP-222: NCN, Al	1.10 (1.60)	4200 (4300)	60	1035	514	Al				HE		
HP-211: NCN	1.10 (1.55)	4200 (4270)	58	893	450					HE		
HP-225: NCN	1.10	4200								HE		
Flogel HD: AN	1.60	5130	81	557	286			Fail				
Flogel: Al	1.60 (1.40)	5000	69	700	350			Fail		B		
Flogel: AN	1.40	5250	80	621	314			Fail		B		
Flogel Al-2: NCN, AN	1.40	5000	70	707	357					B		
Dow												
MS-80-5: NCN, Al	1.10					Al(5%)						
MS-80-10: NCN, Al	1.10					Al(10%)						
MS-80-15: NCN, Al	1.10					Al(15%)						
MS-80-20: NCN, Al	1.10					Al(20%)						
MS-80-25: NCN, Al	1.10					Al(25%)						
MS-80-30: NCN, Al	1.10					Al(30%)						

[a] The letters SNS and fo[illegible] site-mixed slurry.

[b] 6-in. diameter, unconfined.

[c] 3-in. diameter, unconfined.

[d] 1-1/2-in. diameter, unconfined.

[e] Very high energy; costly; for testing only.

[f] 1-1/4-in. diameter, unconfined.

[g] 2-1/4-in. diameter, unconfined.

Table A5. Dry blasting agents.

Product name and contents	Density (g/cm^3)	5 in. diam unconfined detonation velocity (m/s)	Detonation pressure (kb)	E_{tot} (cal/g)	Bubble energy (cal/g)	Metal	Shipping class	Weight strength (%)	Bulk strength (%)	Friction impact 30-cal bullet
Du Pont										
Aluvite 1: NCN, AN, Al	1.05	3583	77	1079			Oxid.			
Aluvite 2: "	1.12	5627	86.8	1404			Oxid.			
Aluvite 3: "		5525	78.3	1078			Oxid.			
Nitramon S[a]	1.30-1.40	3060[b] 3540[c]	31 42							
Nitramon S-EL[d]										
Hercules										
Dynatex B: DNT, AN, coal, fuller's earth										
Dynatex B-WR: "	1.07	3000	23	486	243		NCN			Fail
Tritex: AN, DNT	1.07	2400	14				NCN			Fail
Tritex WR: AN, DNT	1.07	2800	20				NCN			Fail
Tritex 2: NaN, ferro-silicon AN, DNT	1.16	3000	22	578	286		NCN	55	40	Fail
Vibronite B Seismic: coal, DNT, AN	1.15	3360		607						
Vibronite B Seismic: coal, Al, AN, fuller's earth, DNT; high energy	1.17	4140		750						
Vibronite S Seismic: AN, coal, DNT, fuel oil	1.17	3660		607						
Vibronite S-1 Seismic: AN, Al, DNT, fuel oil	1.17	4320		643						
Atlas										
Prestex[e]: DNT, AN, coal, Ca stearate	1.15									
Prestex A: same as above, NG-sensitized	1.18									
Gianite D: DNT, AN, coal	1.05-1.10	2460[f]	16							
Gianite D-1: DNT, AN, coal	0.90-1.02									
Gianite WR[g]: DNT, AN, coal, guar, Ca stearate	1.05-1.10	2460[f]	16							
Trojan-U.S. Powder										
40 WR: nitro starch		3540[h]						40	40	Fail
50WR: "		3660[h]						50	50	Fail
60WR: "		3780[h]						60	60	Fail
70WR: "		3990[h]						70	70	Fail
Stumping Nitro Starch		2850[h]						20	20	Fail
Trojanite A: nitro starch		3000[h]						68	50	
Trojanite B: nitro starch		2850[h]						68	36	
Trojanite C: nitro starch		2700[h]						68	26	

Table A5 (continued)

Product name and contents	Density (g/cm^3)	5 in. diam unconfined detonation velocity (m/s)	Detonation pressure (kb)	R_{tot} (cal/g)	Bubble energy (cal/g)	Metal	Shipping class	Weight strength (%)	Bulk strength (%)	Friction impact 30-cal bullet
Trojan-U.S. Powder (continued)										
Trojel 75: nitro starch, Al		5100				Al			60	
Trojel 75A: nitro starch, Al		5350				Al			65	
Tromax 85: nitro starch		5850						62	90	
Tromax 75: nitro starch		5550						58	70	
Tromax 65: nitro starch		4500						55	58	
Tromax 55: nitro starch		4350						58	55	
Tromax 45: nitro starch		3600						60	50	
Tromax 95: nitro starch	1.66	6150	155					70	95	
Monsanto										
MCN 102	.95	4650	51	920						
MCN 602	1.05	5400	76	1100						
MCN 606	1.20	5700		1100						
M·Powr 100: AN	.90	3900	34			Al				
M·Powr 400: AN, Al	.90	4200	39			Al				
M·Powr 500: AN, Fe, PO_4	1.00	3600	32							
M·Powr 600: AN, Al, Fe, PO_4	1.00	4050	41							

[a] For seismic prospecting, canned.

[b] 2 in. diameter.

[c] 2-1/2 in. diameter.

[d] For seismic prospecting; canned; stronger than Nitramon S.

[e] Has high-explosive charge in nose.

[f] 3 in. diameter, unconfined.

[g] Can be easily dead-pressed if packed too hard.

[h] 1-1/4 in. diameter, unconfined.

GK3/gw